ISSN: 2582-4686 SJIF 2021-3.261,SJIF 2022-2.889,
2024-6.875 ResearchBib IF: 8.848 / 2024

THE MULTIDISCIPLINARY JOURNAL OF SCIENCE AND TECHNOLOGY

VOLUME-4, ISSUE-12

A CHIP THAT REDUCES DEFECTS IN FIBER RESTORATION

Shamuratov Miyras Tolibaevich

Karakalpak State University name after Berdakh, Republic of Karakalpak

Abstract. The article presents the results of the creation of a new design of the chip that reduces the size of the sewing waste - scraps and clots, and the size of the thread residue.

Introduction. At a recent time, the amount of waste from the textile industry and secondary material resources (clot and scraps) has been increasing in the processing of local raw materials. This is a huge reserve that can be used for the production of textiles.

Nowadays, it is relevant to analyze the techniques and technologies of processing of scraps in the sewing enterprises of the Republic of Uzbekistan and the processing of clots in the textile enterprise, to determine their advantages and disadvantages, and to study the scientific research carried out in the field.

Research results. Fabric cutter are used to recover fiber from secondary raw materials. Many scientists are engaged in the research of cutters [1]. In this work, it is fully explained that the cutters are designed to shred textile materials before fiber recovery. Also, the device for cutting various fabrics crosswise and longitudinally [2] consists of a rotating sharp-edged disk fixed on a trolley and moving with it. In addition, it is equipped with three heads for cutting the fabric lengthwise. Two longitudinal cutting heads are designed to cut the right and left edges of the fabric, and the third one is designed to cut the middle of the fabric.

The commonality of the mentioned cutting devices is that they are aimed at improving the cutting of fabric. A lack of connectors supports sewing scraps and clot, meaning there is no extensive support information. The cloth is cut by pulling the two edges with a blade or disk. This method of cutting cannot be applied to a layer of shavings, because the shavings will scatter without being pulled and the wound will be damaged. In contrast to this, a device intended for cutting sorghum and slivers in distant foreign countries is provided in detail in [1].

Based on the above analysis, it can be noted that the simplest in terms of construction of the cutting machine are the mechanical devices working in the normal type of cutting [3-19]. It is well described in [3] that the cutting of the moving cloth this type of devices is carried out by the interaction of the movable and immovable blades that cut the threads of the fabric. This structure and operation are shown in Figure 1.

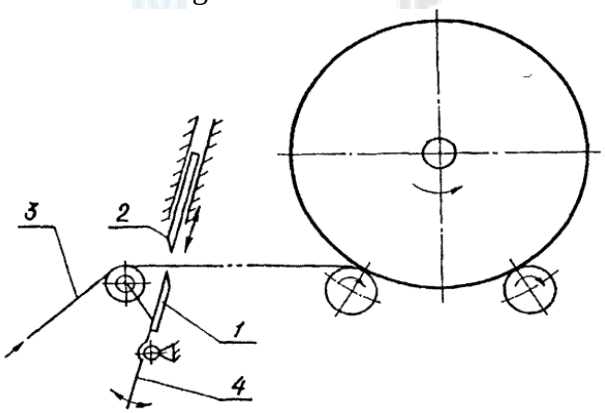

1-immovable blade
2-movable blade
3-fabric in motion
4-tensioner lever

ISSN: 2582-4686 SJIF 2021-3.261,SJIF 2022-2.889,
2024-6.875 ResearchBib IF: 8.848 / 2024

THE MULTIDISCIPLINARY JOURNAL OF SCIENCE AND TECHNOLOGY

VOLUME-4, ISSUE-12

Figure 1. Scheme of the cutting device

Despite the simplicity of the cutter design, it is not widely used in the industry as a result of the unreliability of the device. In addition, frequent sharpening of blades causes discomfort. It should be noted that despite the mentioned shortcomings, the cutting elements of this type are widely used in the technology of fiber recovery from shavings. It can be seen that in this type of cutting, cloth and fabric are cut only crosswise. The disadvantage of this is that if the ribbon-like shavings fall transversely to the direction of movement, they will pass without cutting (grinding). In order to prevent this negative situation, a new design of the cutter was proposed, taking into account that it is effective to cut sewing threads and cloths in two directions perpendicular to each other.

The essence of the new design is that in a device with a tilting feed table, fixed and movable knife assemblies, the feed assembly has a pair of extension rollers, the positions of the feed table and immovable blade are adjusted, and the movable blade also has a support in the form of an adjustable cup. In addition, the device has supply and output conveyors. In the supply unit, a roller with two disk-shaped blades, which cuts additional shavings and clots, is mounted on the rotor by means of rubber bushings. This causes the rotor to rotate at a variable speed, resulting in angular acceleration, which means that the driven blade acts on the shavings with an additional impulse force, increasing the cutting efficiency.

Two rollers with disc-shaped blades cut ribbon sewing scraps transverse to the moving scraps layer.

The structure of the new cutting device is shown in the following pictures. Figure 1 shows the units for adjusting the position of the rotary cutting machine and the working bodies. Figure 2 shows the adjusting-fixing element on the side of the movable blade. Figure 3 shows a cross-section of the rotor,

Figure 4 shows a general view of the cutting shaft with disc-shaped blades, Figure 5 shows the element of fastening of the drive blade "K" in Figure 3 to the rotor, Figure 6 shows the S-S section of Figure 3.

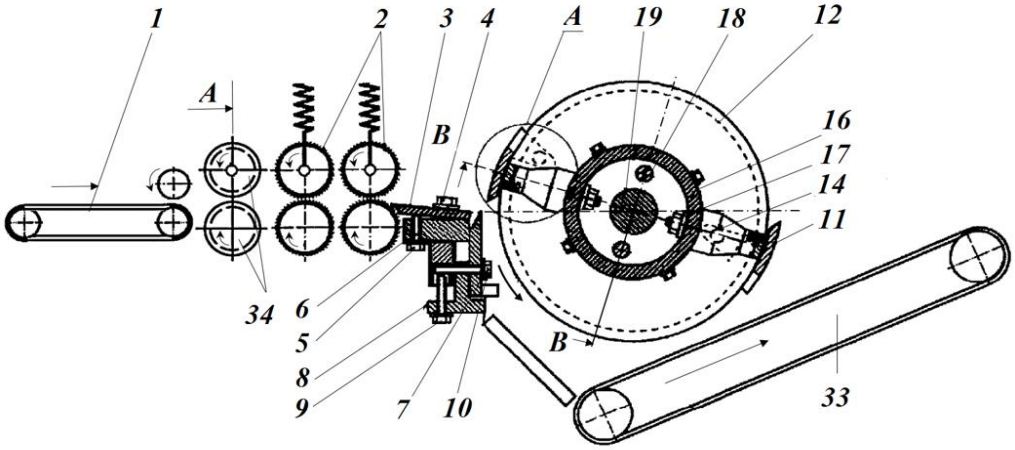

Figure 1. Technological scheme of the rotary cutting machine.

1. supply conveyor, 2. stretch devic, 3. supply table, 4.5. adjusting screws, 6. stand, 7. immovable blade, 8-T-shaped profile, 9,10-adjusting screws, 11- movable blade, 12-flange, 14-glass, 16-support tube, 17-screw, 18-drawer, 19-shaft, 33-conveyor, 34-cutter valik.

ISSN: 2582-4686 SJIF 2021-3.261,SJIF 2022-2.889,
2024-6.875 ResearchBib IF: 8.848 / 2024

THE MULTIDISCIPLINARY JOURNAL OF SCIENCE AND TECHNOLOGY

VOLUME-4, ISSUE-12

Conclusion.In order to eliminate the bands that appear in the regeneration of fiber waste, in return for the creation of a new design of the cutter:

1. Sewing scraps and scraps are cut perpendicular to each other, and the size of the shredded pieces is the same, and the amount of residual thread is reduced accordingly.

2. Uniformity of clothing sizes is ensured.

REFERENCES

1. Gorkova A.G., Povisheniye effektivnosti texnologii polucheniya regenerirovannix volokon iz putanki i loskut// kandidatskaya dissertatsiya/ Ivanova:. 2009 g.

2. Blinken P.Y. Ustroystvo dlya razrezaniya polotna s baxromoy, patent 293895, 1971

3. Goryachev Y.N., Spitsin V.M. Mashina dlya avtomaticheskoy neprerivnoy namotki rulonnix materialov. A.s. 166296 (SSSR). Opubl. v B.I., 155 1965, №22. 13.05.71

4. 15. Patent Yaponii, Kl.48S6, № 46 - 32041, 26.07.76

5. M.Shamuratov va b. Laxtak va qimqimlarni kesish uskunalari, tezis, TTESI Toshkent 2021

6. Shamuratov M. T. Tikuvchilik qiyqimlari va laxtaklardan tola tiklash texnologiyasini takomillashtirish.Texnika fanlari bo‘yicha falsafa doktori (PhD) dissertatsiyasi. Toshkent, 2023 y.

7. Kamolovich, D. R., O‘G‘Li, A. N. U., Yusupovich, A. K., & Eshqobilovich, Q. B. (2024). TUKLI URUG‘LIK CHIGITNI SARALASHNING TAKOMILLASHTIRILGAN TEXNOLOGIYASI. Механика и технология, 2(15), 169-175.

8. Абдихамидов, Н. У. Ў., Джамолов, Р. К., Каршиев, Б. Э., & Абдуллаев, К. Ю. (2024). ОПРЕДЕЛЕНИЕ ОСНОВНЫХ ПАРАМЕТРОВ СОРТИРОВОЧНОГО АГРЕГАТА ВОЛОСАТЫХ СЕМЯН ХЛОПЧАТНИКА МЕТОДОМ МАТЕМАТИЧЕСКОГО ПЛАНИРОВАНИЯ. Universum: технические науки, 4(5 (122)), 39-44.

9. Эшқобилович, Қ. Б. (2023). ПАХТАНИ ҚУРИТИШ ЖАРАЁНИНИ ТОЛА ВА ЧИГИТ НАМЛИГИГА ТАЪСИРИ. Механика и технология, (2 (5) Спецвыпуск), 309-315.

10. Eshqobilovich, Qarshiev Baxtiyor, Gulboev Otabek Abdimurod O‘G‘Li, and Narzullaev Fazliddin Shuhrat O‘G‘Li. "QURITILGAN PAXTANI PNEVMATIK UZATISHDA TOLA VA CHIGIT TEMPERATURALARIGA TA’SIRINI TAHLILI." Механика и технология 1 (8) Спецвыпуск (2024): 226-230.

11. Абдихамидов Н.У., Джамолов Р.К., Қаршиев Б.Э., Абдуллаев К.Ю. Саралаш камерага ўрнатилган чигитни доналовчи тароқ мосламасининг параметрларини аниқлаш. Фан ва технологиялар тараққиёти илмий – техникавий журнал. №1/2024, Бухоро-2024й-285б.

12. Қаршиев БЭ П. А. П., Сайидова М. Ҳ. Пахтани қатламда қуритишнинг аэродинамик режимларини аниқлаш тадқиқоти //Фан ва технологиялар тараққиёти. Илмий-техникавий ва амалий журнал. Бухоро. ISSN. – С. 2181-8193.

13. Parpiyev A. P. et al. Tozalash jarayonida arrali seksiyalardan ajralib chiqqan chiqindi ulushlarini baholash natijalari taxlili //O‘zbekiston to‘qimachilik jurnali. ISSN. – 2010. – Т. 6262. – №. 1. – С. 2022.

14. Каршиев Б. Э., Исматов С. С. РАВНОМЕРНОСТЬ СУШКИ КОМПОНЕНТОВ ХЛОПКА-СЫРЦА //Экономика и социум. – 2023. – №. 9 (112). – С. 485-489.

15. Парпиев А. П., Каршиев Б. Э. РАВНОМЕРНОСТЬ СУШКИ КОМПОНЕНТОВ ХЛОПКА-СЫРЦА //Universum: технические науки. – 2022. – №. 9-2 (102). – С. 51-54.

ISSN: 2582-4686 SJIF 2021-3.261,SJIF 2022-2.889,
2024-6.875 ResearchBib IF: 8.848 / 2024

16. Каршиев Б. Э. и др. Пахтани тозалашга тайёрлаш технологиясининг таҳлили //RESULTS OF NATIONAL SCIENTIFIC RESEARCH. – 2022. – Т. 1. – №. 6.

17. Каршиев Б.Э., Парпиев А.П., Хушбаков А.Н. Анализ температуры, влажности волокна и семян в технологических процессах на хлопкоочистительных предприятиях// INTERNATIONAL SCIENTIFIC AND PRACTICAL CONFERENCE: YOUTH, SCIENCE, EDUCATION: TOPICAL ISSUES, ACHIEVEMENTS AND INNOVATIONS, 2022 Prague, Czech. https://doi.org/10.5281/zenodo.7117865.

18. Қаршиев БЭ П. А. П. Пахта ва уни компонентларини қатламда қуритиш тадқиқоти //ЎзМУ хабарлари. Илмий журнал. ISSN. – С. 2181-7324.

19. Қаршиев БЭ П. А. П., Сайидова М. Ҳ. Пахтани қатламда қуритишнинг аэродинамик режимларини аниқлаш тадқиқоти //Фан ва технологиялар тараққиёти. Илмий-техникавий ва амалий журнал. Бухоро. ISSN. – С. 2181-8193.